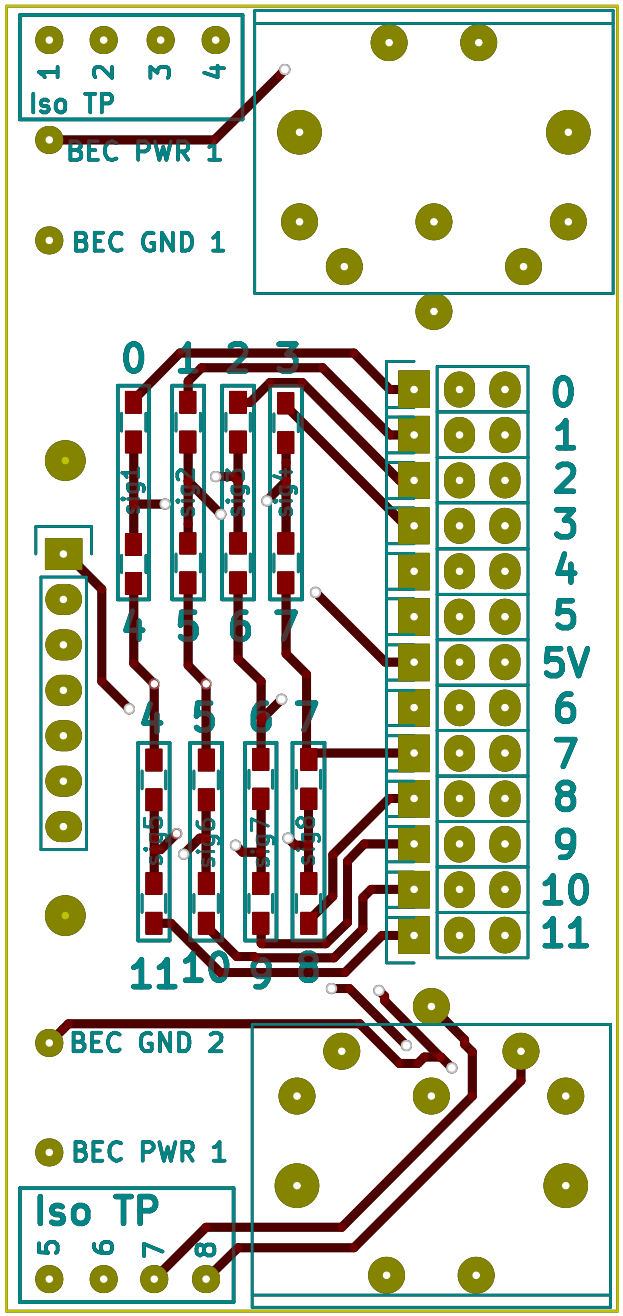
1
2
3
4
Iso TP
BEC PWR 1
BEC GND 1
0
1
2
3
4
5
6
7
5V
6
7
8
9
10
11
BEC GND 2
BEC PWR 1
Iso TP
5
6
7
8